6 HIACE

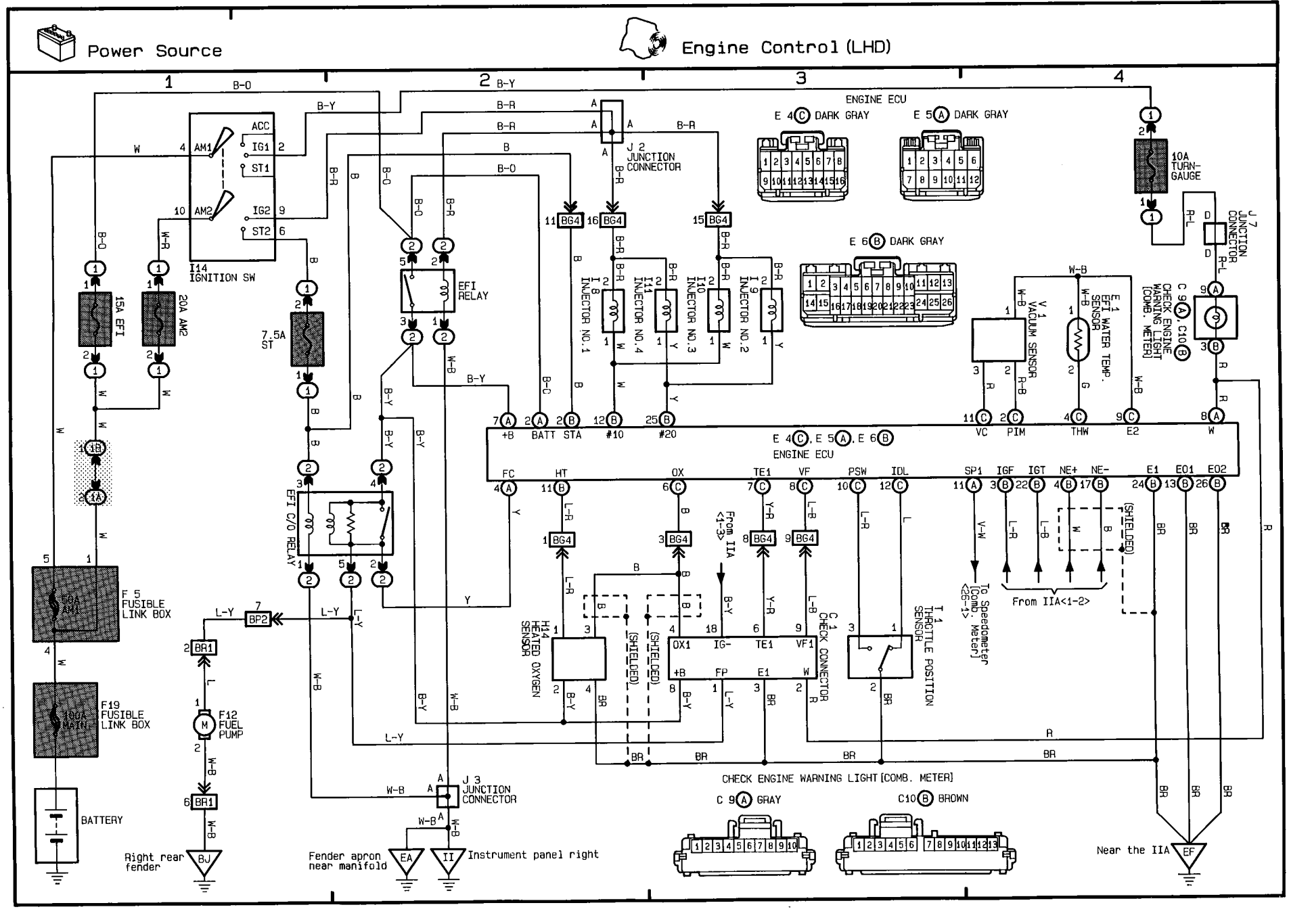
Power Source
Engine Control (LHD)
1
2
3
4
ENGINE ECU
E 4 (C) DARK GRAY
E 5 (A) DARK GRAY
E 6 (B) DARK GRAY
J 2 JUNCTION CONNECTOR
I14 IGNITION SW
ACC
IG1
ST1
IG2
ST2
AM1
AM2
15A EFI
20A AM2
7.5A ST
EFI RELAY
EFI C/O RELAY
I 8 INJECTOR NO.1
I 11 INJECTOR NO.4
I 10 INJECTOR NO.3
I 9 INJECTOR NO.2
10A TURN-GAUGE
J 7 JUNCTION CONNECTOR
C 9 (A), C10 (B) CHECK ENGINE WARNING LIGHT [COMB. METER]
V 1 VACUUM SENSOR
E 1 EFI WATER TEMP. SENSOR
+B
BATT
STA
#10
#20
VC
PIM
THW
E2
E 4 (C), E 5 (A), E 6 (B) ENGINE ECU
FC
HT
OX
TE1
VF
PSW
IDL
SP1
IGF
IGT
NE+
NE-
E1
E01
E02
L 5 FUSIBLE LINK BOX
F19 FUSIBLE LINK BOX
BATTERY
BP2
BR1
F12 FUEL PUMP
H14 HEATED OXYGEN SENSOR
C 1 CHECK CONNECTOR
OX1
IG-
TE1
VF1
+B
FP
E1
T 1 THROTTLE POSITION SENSOR
From IIA <1-3>
To Speedometer [Comb. Meter] <26-1>
From IIA<1-2>
(SHIELDED)
J 3 JUNCTION CONNECTOR
CHECK ENGINE WARNING LIGHT [COMB. METER]
C 9 (A) GRAY
C10 (B) BROWN
Right rear fender
BJ
Fender apron near manifold
EA
II
Instrument panel right
Near the IIA
EF